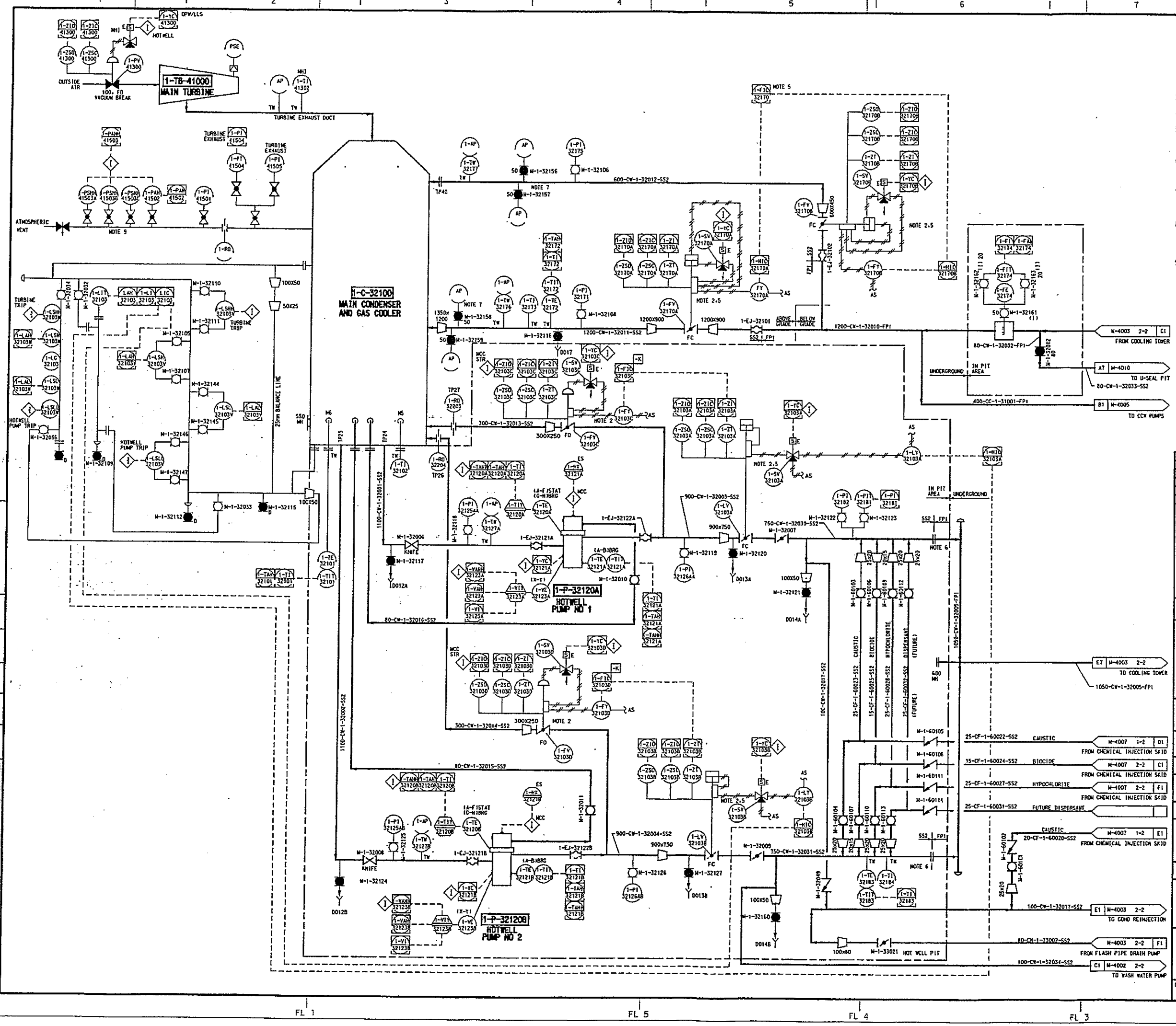

NOTES:

1. REFER TO GENERAL NOTES ON DRAWING M-4001-4/4.
2. 1-FV-32170A AND 1-FV-32170B CLOSE ON HIGH-HIGH CONDENSER LEVEL OR WHEN BOTH HOTWELL PUMPS ARE TRIPPED. 1-LV-32103A AND 1-32103B ARE TO CLOSE IF THEIR RESPECTIVE PUMP TRIPS.
3. ROUTE DRAIN TO HOTWELL PIT FLOOR DRAIN.
4. FIC-1-32170 IS OPERATED IN MANUAL MODE.
5. VOLUME TANK PROVIDED FOR ACTUATION OF VALVE IF AIR SUPPLY IS LOST. REFER TO VALVE MANUFACTURERS DOCUMENTATION FOR PLUMBING ARRANGEMENT.
6. CHEMICAL INJECTION POINTS SHALL BE 90° FROM EACH OTHER. INJECTION INSERT PROBES TO PROTRUDE IN DISCHARGE LINE.
7. TEST TAPS TO BE INSTALLED 120° APART IN SAME PLANE. TEST PORT VAULT SHALL BE REDUCED PORT TYPE BALL VALVES.
8. VALVES WITH (I) DENOTES TO BE INSTALLED ON INSTRUMENTATION INSTALLATION DETAIL. NOT ALL INSTRUMENTATION VALVING AND LINES ARE SHOWN ON P&ID.
9. PART OF TRIP TEST BLOCK. SEE TURBINE CONTROL OIL DRAWING FOR TAG NUMBERS.

Rev	Reason	By	Chk	App.	Date
4	RECORD DRAWING	JAB	CFC	TDD	1/7/04
3	REINJECTION MODIFICATION-DCN 86	JAB	CFC	TDD	1/6/04
2	CHEMICAL INJECTION	DJF	CFC	TDD	5/23/03
1	REVISED BRIDLE AND CHEM INJEC	DJF	WH	TDD	3/27/01
0	ISSUED FOR CONSTRUCTION	DJF	CFC	TDD	1/16/01

Client

KenGen

The Kenya Electricity Generating Company Ltd.
Stima Plaza, Kolobot Road, Parklands
PO Box 47836, Nairobi, Kenya.
Telephone 364-2-3488333, Fax 364-2-3488448.

Drg. No. 12571-102-M-CW-4003-1/2

Consultants

SINCLAIR KNIGHT MERZ
Sinclair Knight Merz Ltd.

Sub-Consultants
Howard Humphreys (Kenya) Ltd.
Consulting Engineers
PB Kennedy & Donkin Limited

Contractor
MITSUBISHI HEAVY INDUSTRIES, LTD.
NAGASAKI SHIPYARD AND MACHINERY WORKS

LAND TURBINE DESIGNING SEC. POWER PLANT ENG. DEPT. | ORDER | ITEM

Scale | Designed: | Checked: | Drawn: | Approved:

MITSUBISHI ELECTRIC CORPORATION
ENERGY AND INDUSTRIAL SYSTEMS CENTER

Scale | Designed: | Checked: | Drawn: | Approved:

POWER ENGINEERS
5940 GLENBROOK DRIVE HAILEY, IDAHO 83333

Scale NONE | Designed: CFC | Checked: WH | Drawn: DJF | Approved: TDD

Job
OLKARIA II GEOTHERMAL POWER PROJECT
CONTRACT OG102: POWER STATION
MECHANICAL & ELECTRICAL PLANT

Title
CIRCULATING WATER SYSTEM
P&ID
SHEET 1

Drg. No. M-4003 1-2 | Rev 4

31ckcircwt.dgn

PEI INTERNAL DISC... REVIEW
ELECT | STRUC | IGC | MECH | CAD

THIS DRAWING PREPARED BY POWER ENGINEERS, INC. FOR A SPECIFIC PROJECT. TAKING INTO CONSIDERATION THE SPECIFIC AND UNIQUE REQUIREMENTS OF THE PROJECT. REUSE OF THIS DRAWING OR ANY INFORMATION CONTAINED IN THIS DRAWING FOR ANY INFORMATION IS PROHIBITED UNLESS WRITTEN PERMISSION FROM BOTH POWER AND POWER'S CLIENT IS GRANTED.